15 June 2022

Laura Van Putten
A/Senior Land Use Assessment Coordinator
Transport for NSW

Dear Laura,

RESPONSE TO SUBMISSION:

STAGED RESIDENTIAL SUBDIVISION OF ONE EXISTING ALLOTMENT TO CREATE 123 TORRENS TITLE LOTS FOR FUTURE RESIDENTIAL DEVELOPMENT AND 22 RESIDUE LOTS AND ASSOCIATED WORKS INCLUDING BULK EARTHWORKS, CIVIL WORKS, CONSTRUCTION OF TEMPORARY ON-SITE DETENTION BASINS, STORMWATER DRAINAGE AND NEW ROADS AT LOT 184 GURNER AVENUE, AUSTRAL

Introduction

SCT Consulting prepared the *Traffic and Access Study for Austral Structure Plan DA* (submitted on 27 October 2021) to support the development application (DA) for a residential subdivision that could yield around 422 dwellings at 35 Gurner Avenue, Austral. The site is under Lot 184 DP 1237400, located in the Liverpool City Council Local Government Area (LGA).

This technical memorandum is prepared to respond to comment No. 4 provided by TfNSW issued on 27 May 2022 for the abovementioned application:

Comment No. 4. The traffic report prepared by SCT Consulting dated 27 October 2021 provides the following scenarios:

> *a) Northbound traffic gives way to southbound traffic (AM)*
>
> *b) Southbound traffic gives way to northbound traffic (PM)*
>
> *c) Northbound traffic gives way to southbound traffic (AM)*
>
> *d) Southbound traffic gives way to northbound traffic (PM).*

It is unclear as to which intersections have been assessed. TfNSW requires SIDRA modelling to show predicted growth with general practice usually showing modelling for the day of opening plus 10 years post-development. TfNSW requests the intersection of Edmondson Avenue and Fifteenth Avenue to be assessed in the SIDRA modelling. SIDRA outputs shall be submitted for further review.

The traffic modelling in the previous study only covered a mid-block assessment to evaluate vehicle queueing on Edmondson Avenue (between Gurner Avenue and Swamphen Street) due to the temporary half-width road configuration.

Hence, supplementary traffic modelling has been carried out in this study to evaluate the intersection performance for Edmondson Avenue and Fifteenth Avenue as requested by TfNSW.

Traffic demand

As part of this response to submission, SIDRA modelling was carried out for the intersection of Edmondson Avenue and Fifteenth Avenue for the AM peak hour in 2026 (assumed year of opening) and 2036 (assumed year of opening plus 10 years post-development).

In order to consider the cumulative impacts of the surrounding development including the network background growth, the progressive development of Austral-North Leppington Precinct and the proposed expansion of the Al-Faisal College (being assessed as part of an SSDA and not approved), traffic forecasts were extracted from the *Transport & Accessibility Assessment for Al-Faisal College* by Traffix (2020), which was undertaken to support the expansion of the existing Al Faisal Primary School and the development of a new Al Faisal Secondary School. The two school sites are located in the vicinity of the residential subdivision and would accommodate about 5,500 students when the development is fully delivered.

We have assumed that the traffic forecasts extracted from the Traffix (2020) report included traffic increases as a result of the network background growth, the progressive development of Austral and Leppington North Precinct and the proposed expansion of the Al-Faisal College.

For comparison purposes, only AM peak hour will be assessed in this study since PM peak hour was not included in Traffix's traffic study. AM peak is typically the worst peak as traffic is more concentrated with commuters typically drive to work in a narrower time period in the morning than the PM peak.

The traffic volumes extracted from the Traffix's traffic study in 2026 and 2036 for the AM peak hour are replicated and shown in **Table 1**.

Table 1 Traffic volumes without the residential subdivision in 2026 and 2036

Year	2026 AM peak	2036 AM peak
Traffic volume	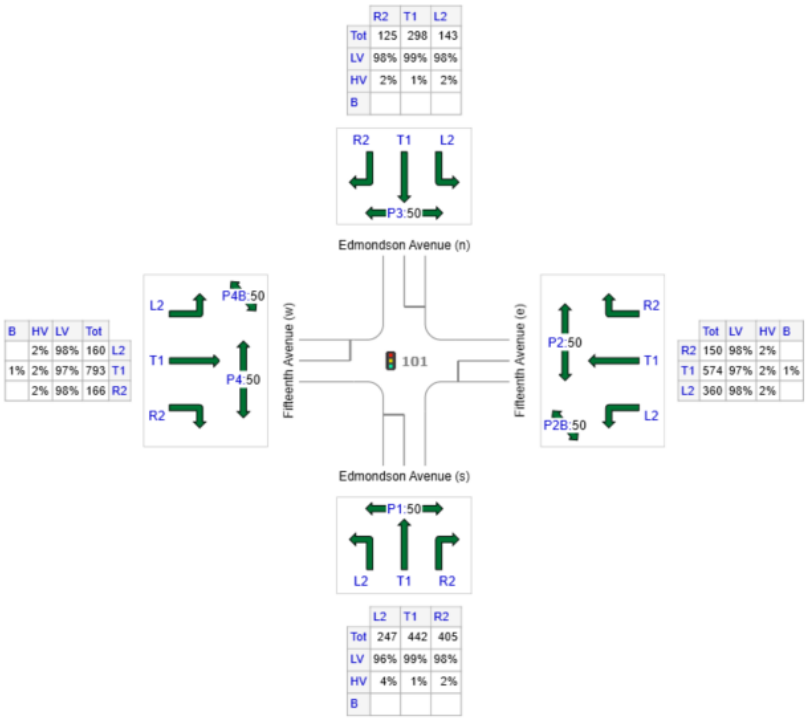	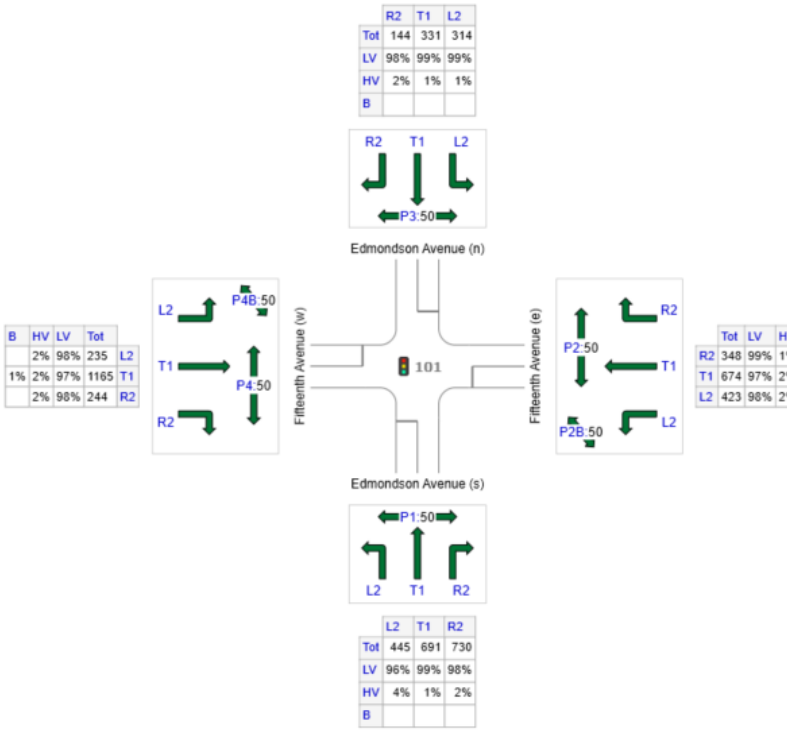

	All MCs	Light Vehicles (LV)	Heavy Vehicles (HV)	Buses (B)
S: Edmondson Avenue (s)	1094	1072	22	-
E: Fifteenth Avenue (e)	1084	1054	24	6
N: Edmondson Avenue (n)	566	559	7	-
W: Fifteenth Avenue (w)	1119	1086	25	8
Total	3863	3772	78	14

	All MCs	Light Vehicles (LV)	Heavy Vehicles (HV)	Buses (B)
S: Edmondson Avenue (s)	1866	1827	39	-
E: Fifteenth Avenue (e)	1445	1410	28	7
N: Edmondson Avenue (n)	789	780	9	-
W: Fifteenth Avenue (w)	1644	1596	36	12
Total	5744	5614	112	18

Source: Transport & Accessibility Assessment for Al-Faisal College, Traffix (2020)

As calculated in **Section 4.5** of SCT Consulting's *Traffic and Access Study for Austral Structure Plan DA*, it is estimated that the residential subdivision would generate around 375 vehicles in both directions in the AM peak hours including around 215 vehicles generated by the western precinct and 160 vehicles generated by the eastern precinct, respectively (**Table 2**).

Table 2 Trip generation for the AM peak hour

Land use	Trip rates	Yield		Trip generation	
		West	East	West	East
Low-density residential	0.95 veh per dwelling	+226 dwellings	+111 dwellings	+215 vehicle trips	+105 vehicle trips
Medium-density residential	0.65 veh per dwelling	-	+85 dwellings	-	+55 vehicle trips
Total		**+422 dwellings**		**+215 vehicle trips**	**+160 vehicle trips**

Given the nature of the strategic road and local road network, it is assumed that the traffic distribution of the subdivision would be:

- 20 per cent of the traffic generated by the western precinct would travel along Gurner Avenue westbound. Hence, this part of the traffic would not use the intersection of Edmondson Avenue and Fifteenth Avenue.
- The remaining 80 per cent of the traffic for the western precinct would be distributed in three directions via the intersection of Edmondson Avenue and Fifteenth Avenue, i.e. 25 per cent eastbound, 30 per cent southbound and 25 per cent westbound.
- 25 per cent of the traffic generated by the eastern precinct would travel westbound along Fifteenth Avenue.
- The percentages remain consistent in the inversed directions.

The proposed yield of the subdivision is consistent with the Austral and Leppington Precinct ILP and the Liverpool Growth Centre Precincts DCP. Hence, it is assumed that the trip generation of the subdivision would be included in the traffic increases as a result of planned development of Austral and Leppington North Precinct.

However, for the purpose of this assessment, the additional trip generation as a result of the subject residential subdivision has been included as a worst-case scenario assessment.

Modelling approach

SCT Consulting proposed the below modelling approach:

- **Step 1:** Develop an intersection model by extracting information from Traffix's traffic report including geometry layout, peak hour traffic volumes and signal timing.
- **Step 2:** Calibrate the models to ensure high consistency of the results between the duplicated model and the original model (by Traffix).
- **Step 3:** Add development traffic as calculated in **Table 2** and rerun the model to understand any impact on the intersection performance as a result of the proposed subdivision.

It is noted that the intersection of Edmondson and Avenue Fifteenth Avenue is expected to be upgraded to a fully signalised intersection to accommodate the traffic increase in the future. The proposed geometry is based on the layouts specified in the *Austral and Leppington North Precinct Plan – Post Exhibition Planning Report (Addendum) 2012* (**Figure 1**).

Figure 1 Proposed intersection layout

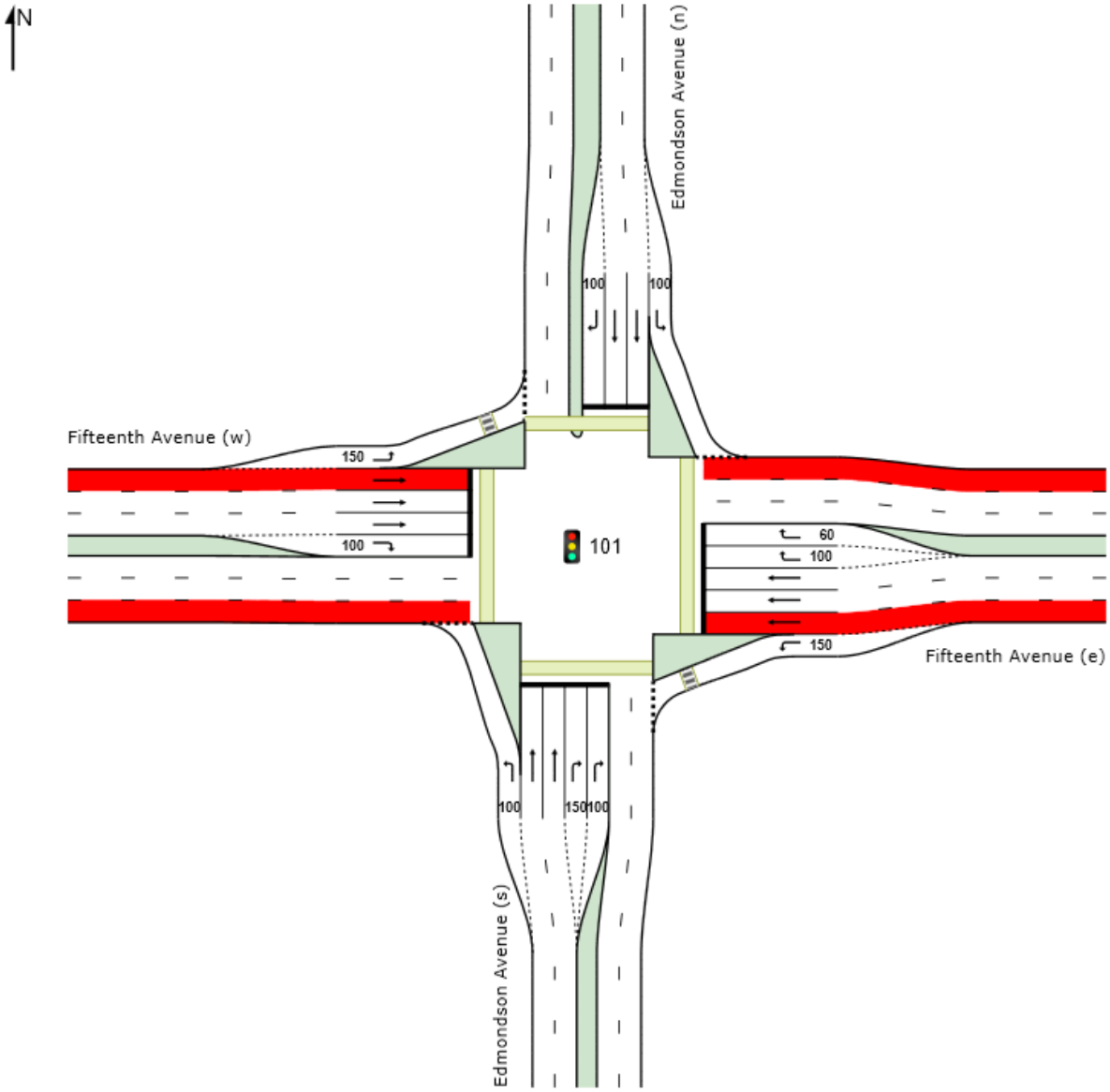

Intersection performance

Operational performance is typically measured through an assessment of the throughput of vehicles across a traffic network, with the average delay per vehicle used to assess the performance of an intersection. This is consistent with Roads and Maritime Service best practice and is the industry standard for the assessment of intersection performance. The average delay per vehicle measure is linked to a Level of Service (LoS) index which characterises the intersection's operational performance. **Table 3** provides a summary of the LoS performance bands.

Table 3 Level of Service Index

Level of Service	Average Delay per Vehicles (sec/h)	Traffic Signals / Roundabout	Give Way / Stop Signs
A	Less than 14.5	Good operation	Good operation
B	14.5 to 28.4	Good with acceptable delays and spare capacity	Acceptable delays and spare capacity
C	28.5 to 42.4	Satisfactory	Satisfactory, but incident study required
D	42.5 to 56.4	Operating near capacity	Near capacity and incident study required
E	56.5 to 70.4	At capacity, at signals incidents will cause excessive delays. Roundabouts require other control method.	At capacity, requires other control method
F	70.5 or greater		

Source: Guide to Traffic Generating Developments; (then) Roads and Maritime Services; 2002

Traffic modelling was undertaken using SIDRA 9.0 and a summary of the intersection performance for the three scenarios is provided in **Table 4**. A more detailed SIDRA output is shown in **Appendix A**.

Table 4 Intersection performance

Performance metric	Traffix's original model		Duplicated model		Updated model with subdivision	
	2026	2036	2026	2036	2026	2036
Total throughput	3,863	5,744	3,863	5,744	4,073	5,954
Traffic increase due to the subdivision	-	-	-	-	210 (+5.4%)	210 (+3.7%)
DoS	0.60	1.04	0.74	1.06	0.74	1.06
Delay	37.1s	82.6s	39.6s	81.2s	40.4s	82.4s
LoS	C	F	C	F	C	F
95th Percentile queue length*	134.7m (W)	483.7m (W)	149.6m (W)	519.7m (W)	150.8m (W)	525.6m (W)

*Letters in the brackets indicate the approach with the longest forecast queue.

It is acknowledged that there is a minor difference between Traffix's original model and the duplicated model such that the duplicated model is fit for testing updated traffic demand. The SIDRA modelling with the addition of the subdivision traffic confirms that:

- There is a minimal increase in the throughput at the intersection (up to five percent increase in the AM peak hour in 2026 and 2036 associated with the residential subdivision).
- The intersection remains to operate at the same Level of Service after adding the development traffic. There is no change in Degree of Saturation and there is limited increase in intersection delays.
- Longer queue lengths occur for the western approach. However, the increment is minor and insignificant.
- By 2036, the intersection records a LoS F. As stated in Traffix's traffic study, it is noted that the intersection had already failed without the school development. Further infrastructure upgrade is necessary to accommodate the background growth, which is to be considered by TfNSW.
- Since the school traffic represents about 13 per cent traffic increase in 2036 (+772 vehicles) at this intersection, Hence, the traffic generated by the residential subdivision (+210 vehicles) has much less impact on the intersection performance.

Conclusion

To respond to the comment from TfNSW, this study confirms that the proposed residential subdivision has marginal impact on the intersection of Edmondson and Avenue Fifteenth Avenue.

Yours sincerely

Andy Yung
Director
Andy.Yung@sctconsulting.com.au | 0468 862 482
sctconsulting.com.au | Level 10, 99 Mount Street, North Sydney, 2060
SCT Consulting

Appendix A SIDRA output

MOVEMENT SUMMARY

Site: 101 [EDM_FIF_AM_26_DY (Site Folder: General)]

New Site
Site Category: Future Conditions 1
Signals - EQUISAT (Fixed-Time/SCATS) Isolated Cycle Time = 120 seconds (Site Optimum Cycle Time - Minimum Delay)
Variable Sequence Analysis applied. The results are given for the selected output sequence.

Vehicle Movement Performance

Mov ID	Turn	INPUT VOLUMES [Total veh/h	HV] %	DEMAND FLOWS [Total veh/h	HV] %	Deg. Satn v/c	Aver. Delay sec	Level of Service	95% BACK OF QUEUE [Veh. veh	Dist] m	Prop. Que	Effective Stop Rate	Aver. No. Cycles	Aver. Speed km/h
South: Edmondson Avenue (s)														
1	L2	247	3.9	247	3.9	0.238	12.4	LOS A	5.1	36.8	0.45	0.69	0.45	47.2
2	T1	448	1.1	448	1.1	* 0.664	50.8	LOS D	12.5	88.4	0.99	0.83	1.00	25.7
3	R2	405	1.8	405	1.8	* 0.741	61.5	LOS E	12.0	85.2	1.00	0.87	1.10	22.6
Approach		1100	2.0	1100	2.0	0.741	46.1	LOS D	12.5	88.4	0.87	0.81	0.91	27.9
East: Fifteenth Avenue (e)														
4	L2	360	2.3	360	2.3	0.288	10.8	LOS A	6.6	46.8	0.41	0.68	0.41	45.7
5	T1	610	3.3	610	3.3	0.559	39.4	LOS C	15.1	107.7	0.91	0.77	0.91	33.4
6	R2	155	1.6	155	1.6	0.340	58.7	LOS E	4.3	30.2	0.96	0.77	0.96	23.1
Approach		1125	2.7	1125	2.7	0.559	32.9	LOS C	15.1	107.7	0.75	0.74	0.75	34.1
North: Edmondson Avenue (n)														
7	L2	191	1.7	191	1.7	0.209	16.2	LOS B	5.0	35.2	0.53	0.70	0.53	41.1
8	T1	356	0.8	356	0.8	0.526	49.2	LOS D	9.6	67.8	0.96	0.79	0.96	26.1
9	R2	173	2.0	173	2.0	0.634	58.7	LOS E	9.8	69.7	0.99	0.82	1.00	27.2
Approach		720	1.3	720	1.3	0.634	42.7	LOS D	9.8	69.7	0.85	0.77	0.86	29.1
West: Fifteenth Avenue (w)														
10	L2	165	2.0	165	2.0	0.127	9.2	LOS A	2.3	16.2	0.32	0.64	0.32	49.8
11	T1	797	3.3	797	3.3	* 0.731	42.3	LOS C	21.1	150.8	0.96	0.84	0.98	32.4
12	R2	166	1.9	166	1.9	* 0.730	63.7	LOS E	9.9	70.6	1.00	0.86	1.10	26.1
Approach		1128	2.9	1128	2.9	0.731	40.6	LOS C	21.1	150.8	0.87	0.82	0.90	32.9
All Vehicles		4073	2.3	4073	2.3	0.741	40.4	LOS C	21.1	150.8	0.84	0.79	0.85	31.1

Site Level of Service (LOS) Method: Delay (RTA NSW). Site LOS Method is specified in the Parameter Settings dialog (Site tab).
Vehicle movement LOS values are based on average delay per movement.
Intersection and Approach LOS values are based on average delay for all vehicle movements.
Delay Model: SIDRA Standard (Geometric Delay is included).
Queue Model: SIDRA Standard.
Gap-Acceptance Capacity: SIDRA Standard (Akçelik M3D).
HV (%) values are calculated for All Movement Classes of All Heavy Vehicle Model Designation.

* Critical Movement (Signal Timing)

Pedestrian Movement Performance

Mov ID	Crossing	Input Vol. ped/h	Dem. Flow ped/h	Aver. Delay sec	Level of Service	AVERAGE BACK OF QUEUE [Ped ped	Dist] m	Prop. Que	Effective Stop Rate	Travel Time sec	Travel Dist. m	Aver. Speed m/sec
South: Edmondson Avenue (s)												
P1	Full	50	53	54.3	LOS E	0.2	0.2	0.95	0.95	224.9	221.8	0.99
East: Fifteenth Avenue (e)												
P2	Full	50	53	54.3	LOS E	0.2	0.2	0.95	0.95	230.0	228.4	0.99

North: Edmondson Avenue (n)												
P3	Full	50	53	54.3	LOS E	0.2	0.2	0.95	0.95	223.9	220.5	0.98
West: Fifteenth Avenue (w)												
P4	Full	50	53	54.3	LOS E	0.2	0.2	0.95	0.95	227.4	225.1	0.99
All Pedestrians		0	211	54.3	LOS E	0.2	0.2	0.95	0.95	226.5	224.0	0.99

Level of Service (LOS) Method: SIDRA Pedestrian LOS Method (Based on Average Delay)
Pedestrian movement LOS values are based on average delay per pedestrian movement.
Intersection LOS value for Pedestrians is based on average delay for all pedestrian movements.

SIDRA INTERSECTION 9.0 | Copyright © 2000-2020 Akcelik and Associates Pty Ltd | sidrasolutions.com

MOVEMENT SUMMARY

Site: 101 [EDM_FIF_AM_26_FY (Site Folder: General)]

New Site
Site Category: Future Conditions 1
Signals - EQUISAT (Fixed-Time/SCATS) Isolated Cycle Time = 120 seconds (Site Optimum Cycle Time - Minimum Delay)
Variable Sequence Analysis applied. The results are given for the selected output sequence.

Vehicle Movement Performance

Mov ID	Turn	INPUT VOLUMES [Total veh/h	HV] %	DEMAND FLOWS [Total veh/h	HV] %	Deg. Satn v/c	Aver. Delay sec	Level of Service	95% BACK OF QUEUE [Veh. veh	Dist] m	Prop. Que	Effective Stop Rate	Aver. No. Cycles	Aver. Speed km/h
South: Edmondson Avenue (s)														
1	L2	247	3.9	247	3.9	0.224	11.0	LOS A	4.5	32.3	0.41	0.67	0.41	48.3
2	T1	442	1.1	442	1.1	0.573	47.3	LOS D	11.8	83.6	0.96	0.80	0.96	26.7
3	R2	405	1.8	405	1.8	* 0.741	61.5	LOS E	12.0	85.2	1.00	0.87	1.10	22.6
Approach		1094	2.0	1094	2.0	0.741	44.3	LOS D	12.0	85.2	0.85	0.80	0.88	28.5
East: Fifteenth Avenue (e)														
4	L2	360	2.3	360	2.3	0.283	10.2	LOS A	6.1	43.5	0.39	0.67	0.39	46.4
5	T1	574	3.3	574	3.3	0.526	39.0	LOS C	14.0	100.2	0.89	0.76	0.89	33.6
6	R2	150	1.6	150	1.6	0.329	58.6	LOS E	4.1	29.2	0.95	0.76	0.95	23.2
Approach		1084	2.7	1084	2.7	0.526	32.1	LOS C	14.0	100.2	0.73	0.73	0.73	34.4
North: Edmondson Avenue (n)														
7	L2	143	1.7	143	1.7	0.156	15.7	LOS B	3.5	25.1	0.51	0.69	0.51	41.5
8	T1	298	0.8	298	0.8	* 0.440	48.3	LOS D	7.9	55.8	0.94	0.76	0.94	26.4
9	R2	125	2.0	125	2.0	0.550	60.4	LOS E	7.1	50.5	0.99	0.79	0.99	26.8
Approach		566	1.3	566	1.3	0.550	42.8	LOS D	7.9	55.8	0.84	0.75	0.84	29.0
West: Fifteenth Avenue (w)														
10	L2	160	2.0	160	2.0	0.123	8.9	LOS A	2.1	15.0	0.31	0.64	0.31	50.1
11	T1	793	3.3	793	3.3	* 0.727	42.2	LOS C	21.0	149.6	0.96	0.84	0.97	32.4
12	R2	166	1.9	166	1.9	* 0.730	63.7	LOS E	9.9	70.6	1.00	0.86	1.10	26.1
Approach		1119	2.9	1119	2.9	0.730	40.6	LOS C	21.0	149.6	0.87	0.81	0.90	32.9
All Vehicles		3863	2.4	3863	2.4	0.741	39.6	LOS C	21.0	149.6	0.82	0.78	0.84	31.4

Site Level of Service (LOS) Method: Delay (RTA NSW). Site LOS Method is specified in the Parameter Settings dialog (Site tab).
Vehicle movement LOS values are based on average delay per movement.
Intersection and Approach LOS values are based on average delay for all vehicle movements.
Delay Model: SIDRA Standard (Geometric Delay is included).
Queue Model: SIDRA Standard.
Gap-Acceptance Capacity: SIDRA Standard (Akçelik M3D).
HV (%) values are calculated for All Movement Classes of All Heavy Vehicle Model Designation.

* Critical Movement (Signal Timing)

Pedestrian Movement Performance

Mov ID	Crossing	Input Vol. ped/h	Dem. Flow ped/h	Aver. Delay sec	Level of Service	AVERAGE BACK OF QUEUE [Ped ped	Dist] m	Prop. Que	Effective Stop Rate	Travel Time sec	Travel Dist. m	Aver. Speed m/sec
South: Edmondson Avenue (s)												
P1	Full	50	53	54.3	LOS E	0.2	0.2	0.95	0.95	224.9	221.8	0.99
East: Fifteenth Avenue (e)												
P2	Full	50	53	54.3	LOS E	0.2	0.2	0.95	0.95	230.0	228.4	0.99

North: Edmondson Avenue (n)												
P3	Full	50	53	54.3	LOS E	0.2	0.2	0.95	0.95	223.9	220.5	0.98
West: Fifteenth Avenue (w)												
P4	Full	50	53	54.3	LOS E	0.2	0.2	0.95	0.95	227.4	225.1	0.99
All Pedestrians		0	211	54.3	LOS E	0.2	0.2	0.95	0.95	226.5	224.0	0.99

Level of Service (LOS) Method: SIDRA Pedestrian LOS Method (Based on Average Delay)
Pedestrian movement LOS values are based on average delay per pedestrian movement.
Intersection LOS value for Pedestrians is based on average delay for all pedestrian movements.

SIDRA INTERSECTION 9.0 | Copyright © 2000-2020 Akcelik and Associates Pty Ltd | sidrasolutions.com

MOVEMENT SUMMARY

Site: 101 [EDM_FIF_AM_36_DY (Site Folder: General)]

New Site
Site Category: Future Conditions 1
Signals - EQUISAT (Fixed-Time/SCATS) Isolated Cycle Time = 150 seconds (Site User-Given Cycle Time)
Variable Sequence Analysis applied. The results are given for the selected output sequence.

Vehicle Movement Performance

Mov ID	Turn	INPUT VOLUMES [Total veh/h	HV] %	DEMAND FLOWS [Total veh/h	HV] %	Deg. Satn v/c	Aver. Delay sec	Level of Service	95% BACK OF QUEUE [Veh. veh	Dist] m	Prop. Que	Effective Stop Rate	Aver. No. Cycles	Aver. Speed km/h
South: Edmondson Avenue (s)														
1	L2	445	3.9	445	3.9	0.434	17.8	LOS B	15.5	112.3	0.58	0.74	0.58	43.5
2	T1	697	1.2	697	1.2	0.822	64.6	LOS E	25.7	181.6	1.00	0.93	1.10	22.2
3	R2	730	1.8	730	1.8	* 1.040	142.3	LOS F	40.5	288.1	1.00	1.19	1.67	12.3
Approach		1872	2.1	1872	2.1	1.040	83.8	LOS F	40.5	288.1	0.90	0.99	1.20	19.3
East: Fifteenth Avenue (e)														
4	L2	423	2.3	423	2.3	0.343	14.4	LOS A	11.7	83.4	0.46	0.69	0.46	42.6
5	T1	710	3.3	710	3.3	0.601	47.1	LOS D	21.7	155.0	0.91	0.78	0.91	30.8
6	R2	353	0.8	353	0.8	0.757	77.6	LOS F	13.1	92.4	1.00	0.86	1.10	19.4
Approach		1486	2.4	1486	2.4	0.757	45.1	LOS D	21.7	155.0	0.80	0.78	0.83	29.2
North: Edmondson Avenue (n)														
7	L2	362	0.9	362	0.9	0.493	41.2	LOS C	17.3	122.3	0.80	0.92	0.80	28.2
8	T1	389	0.9	389	0.9	* 0.656	65.2	LOS E	13.6	95.8	0.99	0.82	0.99	22.1
9	R2	192	2.0	192	2.0	0.792	78.6	LOS F	14.5	103.1	1.00	0.89	1.13	23.0
Approach		943	1.1	943	1.1	0.792	58.7	LOS E	17.3	122.3	0.92	0.87	0.95	24.2
West: Fifteenth Avenue (w)														
10	L2	240	2.0	240	2.0	0.209	15.5	LOS B	6.6	47.2	0.45	0.68	0.45	45.1
11	T1	1169	3.3	1169	3.3	* 1.063	145.3	LOS F	73.6	525.6	1.00	1.43	1.68	15.1
12	R2	244	1.9	244	1.9	* 1.058	156.2	LOS F	27.8	197.6	1.00	1.22	1.80	14.1
Approach		1653	2.9	1653	2.9	1.063	128.1	LOS F	73.6	525.6	0.92	1.29	1.52	16.4
All Vehicles		5954	2.2	5954	2.2	1.063	82.4	LOS F	73.6	525.6	0.88	1.00	1.15	20.5

Site Level of Service (LOS) Method: Delay (RTA NSW). Site LOS Method is specified in the Parameter Settings dialog (Site tab).
Vehicle movement LOS values are based on average delay per movement.
Intersection and Approach LOS values are based on average delay for all vehicle movements.
Delay Model: SIDRA Standard (Geometric Delay is included).
Queue Model: SIDRA Standard.
Gap-Acceptance Capacity: SIDRA Standard (Akçelik M3D).
HV (%) values are calculated for All Movement Classes of All Heavy Vehicle Model Designation.

* Critical Movement (Signal Timing)

Pedestrian Movement Performance

Mov ID	Crossing	Input Vol. ped/h	Dem. Flow ped/h	Aver. Delay sec	Level of Service	AVERAGE BACK OF QUEUE [Ped ped	Dist] m	Prop. Que	Effective Stop Rate	Travel Time sec	Travel Dist. m	Aver. Speed m/sec
South: Edmondson Avenue (s)												
P1	Full	50	53	69.3	LOS F	0.2	0.2	0.96	0.96	239.9	221.8	0.92
East: Fifteenth Avenue (e)												
P2	Full	50	53	69.3	LOS F	0.2	0.2	0.96	0.96	245.0	228.4	0.93
North: Edmondson Avenue (n)												

P3	Full	50	53	69.3	LOS F	0.2	0.2	0.96	0.96	238.9	220.5	0.92
West: Fifteenth Avenue (w)												
P4	Full	50	53	69.3	LOS F	0.2	0.2	0.96	0.96	242.4	225.1	0.93
All Pedestrians		0	211	69.3	LOS F	0.2	0.2	0.96	0.96	241.5	224.0	0.93

Level of Service (LOS) Method: SIDRA Pedestrian LOS Method (Based on Average Delay)
Pedestrian movement LOS values are based on average delay per pedestrian movement.
Intersection LOS value for Pedestrians is based on average delay for all pedestrian movements.

SIDRA INTERSECTION 9.0 | Copyright © 2000-2020 Akcelik and Associates Pty Ltd | sidrasolutions.com

MOVEMENT SUMMARY

Site: 101 [EDM_FIF_AM_36_FY (Site Folder: General)]

New Site
Site Category: Future Conditions 1
Signals - EQUISAT (Fixed-Time/SCATS) Isolated Cycle Time = 150 seconds (Site Optimum Cycle Time - Minimum Delay)
Variable Sequence Analysis applied. The results are given for the selected output sequence.

Vehicle Movement Performance

Mov ID	Turn	INPUT VOLUMES [Total veh/h	HV] %	DEMAND FLOWS [Total veh/h	HV] %	Deg. Satn v/c	Aver. Delay sec	Level of Service	95% BACK OF QUEUE [Veh. veh	Dist] m	Prop. Que	Effective Stop Rate	Aver. No. Cycles	Aver. Speed km/h
South: Edmondson Avenue (s)														
1	L2	445	3.9	445	3.9	0.410	15.2	LOS B	13.7	99.3	0.52	0.72	0.52	45.1
2	T1	691	1.2	691	1.2	0.727	55.8	LOS D	23.2	164.1	0.98	0.84	0.98	24.3
3	R2	730	1.8	730	1.8	* 1.040	142.3	LOS F	40.5	288.1	1.00	1.19	1.67	12.3
Approach		1866	2.1	1866	2.1	1.040	79.9	LOS F	40.5	288.1	0.88	0.95	1.14	20.0
East: Fifteenth Avenue (e)														
4	L2	423	2.3	423	2.3	0.337	13.3	LOS A	11.0	78.4	0.44	0.69	0.44	43.5
5	T1	674	3.3	674	3.3	0.571	46.6	LOS D	20.4	145.4	0.90	0.77	0.90	30.9
6	R2	348	0.8	348	0.8	0.746	77.2	LOS F	12.9	90.7	1.00	0.86	1.09	19.4
Approach		1445	2.4	1445	2.4	0.746	44.2	LOS D	20.4	145.4	0.79	0.77	0.81	29.5
North: Edmondson Avenue (n)														
7	L2	314	0.9	314	0.9	0.428	39.6	LOS C	15.0	105.9	0.77	0.88	0.77	28.8
8	T1	331	0.9	331	0.9	* 0.558	64.0	LOS E	11.3	80.1	0.98	0.80	0.98	22.3
9	R2	144	2.0	144	2.0	0.743	79.7	LOS F	10.8	76.7	1.00	0.86	1.11	22.8
Approach		789	1.1	789	1.1	0.743	57.2	LOS E	15.0	105.9	0.90	0.84	0.92	24.5
West: Fifteenth Avenue (w)														
10	L2	235	2.0	235	2.0	0.204	15.0	LOS B	6.3	44.8	0.45	0.68	0.45	45.4
11	T1	1165	3.3	1165	3.3	* 1.060	142.9	LOS F	72.8	519.7	1.00	1.42	1.67	15.3
12	R2	244	1.9	244	1.9	* 1.058	156.2	LOS F	27.8	197.6	1.00	1.22	1.80	14.1
Approach		1644	2.9	1644	2.9	1.060	126.6	LOS F	72.8	519.7	0.92	1.28	1.51	16.6
All Vehicles		5744	2.3	5744	2.3	1.060	81.2	LOS F	72.8	519.7	0.87	0.99	1.13	20.7

Site Level of Service (LOS) Method: Delay (RTA NSW). Site LOS Method is specified in the Parameter Settings dialog (Site tab).
Vehicle movement LOS values are based on average delay per movement.
Intersection and Approach LOS values are based on average delay for all vehicle movements.
Delay Model: SIDRA Standard (Geometric Delay is included).
Queue Model: SIDRA Standard.
Gap-Acceptance Capacity: SIDRA Standard (Akçelik M3D).
HV (%) values are calculated for All Movement Classes of All Heavy Vehicle Model Designation.

* Critical Movement (Signal Timing)

Pedestrian Movement Performance

Mov ID	Crossing	Input Vol. ped/h	Dem. Flow ped/h	Aver. Delay sec	Level of Service	AVERAGE BACK OF QUEUE [Ped ped	Dist] m	Prop. Que	Effective Stop Rate	Travel Time sec	Travel Dist. m	Aver. Speed m/sec
South: Edmondson Avenue (s)												
P1	Full	50	53	69.3	LOS F	0.2	0.2	0.96	0.96	239.9	221.8	0.92
East: Fifteenth Avenue (e)												
P2	Full	50	53	69.3	LOS F	0.2	0.2	0.96	0.96	245.0	228.4	0.93

North: Edmondson Avenue (n)												
P3	Full	50	53	69.3	LOS F	0.2	0.2	0.96	0.96	238.9	220.5	0.92
West: Fifteenth Avenue (w)												
P4	Full	50	53	69.3	LOS F	0.2	0.2	0.96	0.96	242.4	225.1	0.93
All Pedestrians		0	211	69.3	LOS F	0.2	0.2	0.96	0.96	241.5	224.0	0.93

Level of Service (LOS) Method: SIDRA Pedestrian LOS Method (Based on Average Delay)
Pedestrian movement LOS values are based on average delay per pedestrian movement.
Intersection LOS value for Pedestrians is based on average delay for all pedestrian movements.

SIDRA INTERSECTION 9.0 | Copyright © 2000-2020 Akcelik and Associates Pty Ltd | sidrasolutions.com